Barksdale®
CONTROL PRODUCTS
CRANE A SUBSIDIARY OF CRANE CO.

Bilge Guard Switches

For Critical Safety in Marine Applications

LEVEL

Certifications & Approvals

see the difference.

Bilge Level Switch

UNS-VA/SB4/5 Bilge Guard

Level switch without and with test function

Technical Data

Material	Stainless Steel: Stem, Bracket, Float Chamber
Mounting	Holding Bracket
Cable	Halogen-free Polymer Cable, 2 x 0.75 mm²
Float Material	Polyethylene
Cap Nut Material	Polyamide
Immersion depth at density 1. at density 0.8	 28 ±2 mm L1 ~18 mm 35 ±2 mm L1 ~11 mm
Float Diameter (in mm)	52
Operating Pressure Bar at 20 °C	3
Min. Fluid Specific Grafity in (g/cm³)	0.80
Mounting Position	vertical ± 15°
Protection Class	IP67, IP68
Contact Mode	NO / NC
Contact Rating	Max. 230 V AC / DC Max. 2.0 A Max. 40 VA / W
Operating Temperature	-20 °C...+70 °C
Weight	approx: 175 g
Approval	DNV, BV, RINA, LR. For MED, consult factory
EX Approval	IECEx TUB 17.0039X TÜV 18 ATEX 214370 X II 1 G Ex ia IIB T6 Ga or II 1/2 G Ex ia IIB T6 Ga/Gb or II 2 G Ex ia IIB T6 Gb or II 1 D Ex ia IIIC T100°C Da

Order Code

Order No.	Cable Length*	Order No.	Cable Length*
0111-509	2m	0111-669[4]	2m
0111-529	5m	0111-653[4]	5m
0111-660	10m	0111-689[4]	10m
0111-528	15m	0111-718[4]	15m
0111-510[1]	2m	0111-537[1,4]	2m
0111-652[1]	5m	0111-716[1,4]	5m
0111-531[1]	10m	0111-765[1,4]	10m
0111-534[1]	15m	0111-760[1,4]	15m

*For longer lead length, consult factory.

Note[1] :UNS-VA/SB5 Manual Test Function: Integrated test function enables quick and reliable verification of switch and alarm operation without changing the liquid level to simulate high-level condition.

Note 2: For diagnostic function, all are availabe with wire break detection. Consult Factory.

Note 3: By turning the float upside down the function of the switch contact can be changed from NO (standard) in NC or vice versa. (Not possible with SPDT contacts). The contact modes (NO or NC) are defined on the basis of an empty tank and for a level switch mounted through the top.

Note[4] :EX Version.

Bilge Level Switch

UNS-VA/SB4/5 Bilge Guard

Dimensions (mm / inch)

SB4

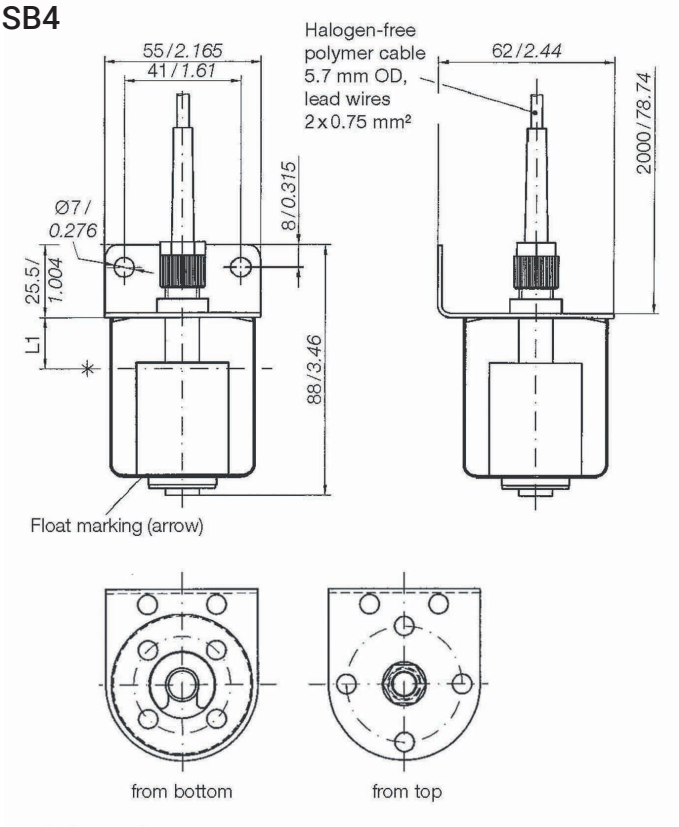

SB4 /SB5

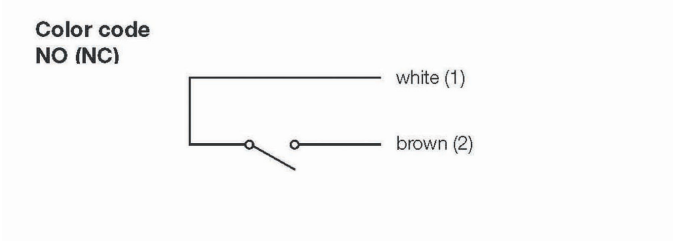

SB5

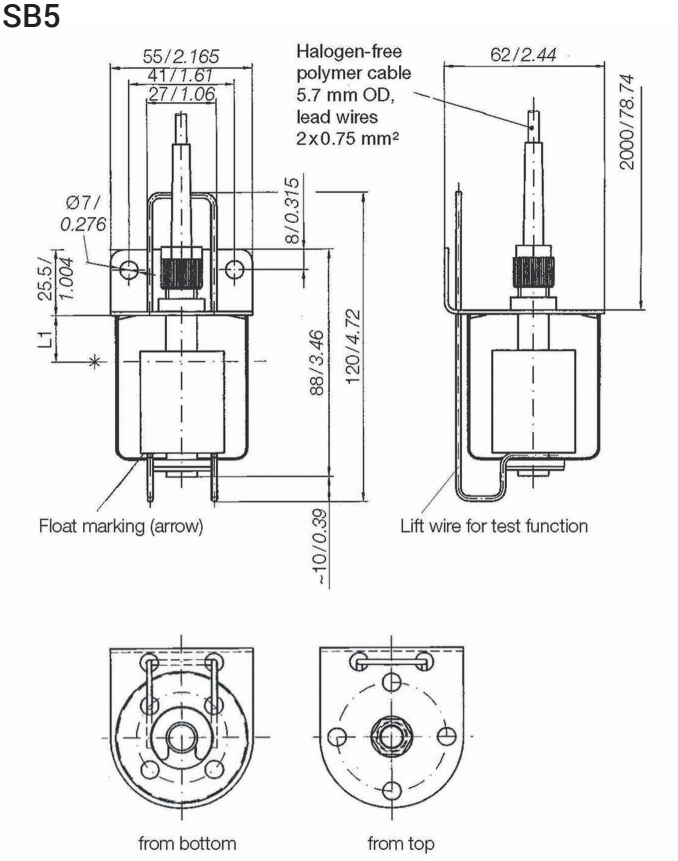

3

Bilge Level Switch

UNS-VA/SB-VA52 / UNS-VA/SB1-VA52

Heavy-Duty Bilge Level Switch with Stainless Steel Float with & without Test Function

Technical Data

Material	Stainless steel 1.4571
Mounting	Holding Bracket
Cable Type	Marine Cable
Float Material	Stainless Steel
Temperature range	max. -20 °C ... +80 °C
Float Diameter (in mm)	52
Operating Pressure Bar at 20 °C	10
Min. Fluid Spedific Gravity in g/cm³	0.70
Protection class	IP67
Operating Temperatur SB SB1	 -20 °C...+85 °C -20 °C...+80 °C
Weight	aprox. 735 g
Approvals	DNV, BV, RINA
EX Approval	IECEx TUN 17.0039X TÜV 18 ATEX 214370 X II 1 G Ex ia IIC T6 Ga or II 1/2 G Ex ia IIC T6 Ga/Gb or II 2 G Ex ia IICT6 Gb or II 1 D Ex ia IIIC T100°C Da

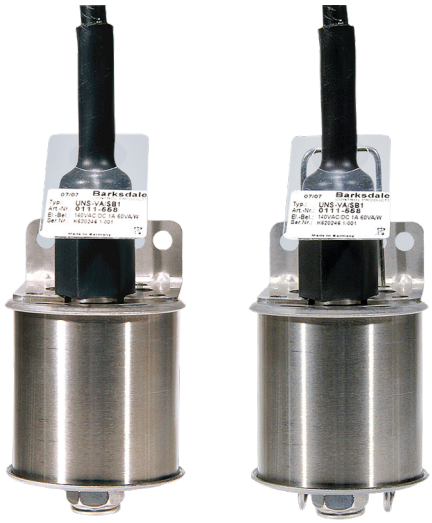

Order Code

Series	Order No.	Cable Length*	Contact Mode and Rating	
UNS-VA/SB-VA52	0111-626[1]	2m	NO/NC	250 V AC / DC, 3.0 A, 100 VA / W
	0111-627[1]	5m		
	0111-628[1]	10m		
	0111-558[1]	2m	SPDT	140 V AC / DC, 1.0 A, 60 VA / W
	0111-565[1]	5m		
	0111-567[1]	10m		
UNS-VA/SB1-VA52	0111-623	2m	NO/NC	250 V AC / DC, 3.0 A, 100 VA / W
	0111-624	5m		
	0111-625	10m		
	0111-629	2m	SPDT	140 V AC / DC, 1.0 A, 60 VA / W
	0111-630	5m		
	0111-631	10m		

*For longer lead length, consult factory.

Note 1: UNS-VA/SB-VA52 Manual Test Function: Integrated test function enables quick and reliable verification of switch and alarm operation without changing the liquid level to simulate high-level condition.

Note 2: For diagnostic funtion, all are availabe with wire break detection. Consult Factory.

Bilge Level Switch

UNS-VA/SB-VA52 / UNS-VA/SB1-VA52

Heavy-Duty Bilge Level Switch with Stainless Steel Float with & without Test Function

Dimensions (mm / inch)

UNS-VA/SB-VA52

with lifting bracket

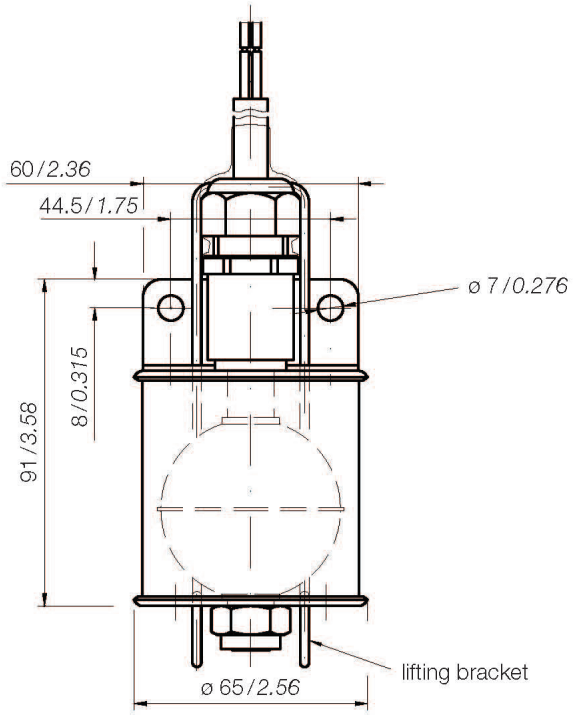

UNS-VA/SB-VA52 / UNS-VA/SB1-VA52

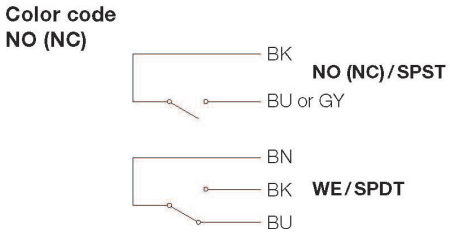

UNS-VA/SB1-VA52

without lifting bracket

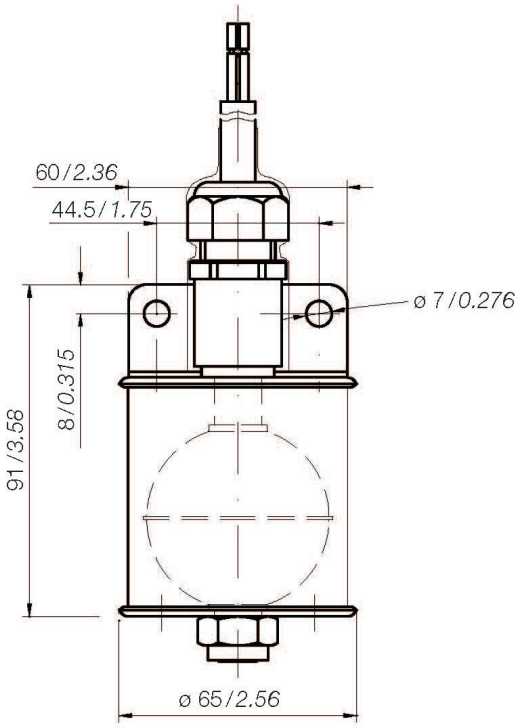

Design with Us

Leverage our Engineering Expertise

Customized Products for Your Project

Barksdale offers more than 50 product families and millions of configured options to measure, monitor and control processes essential to the industrial, power and transportation markets. We can make basic modifications to these standard products and options to ensure they are exactly matched to the project requirements.

Market-focused. Technology-driven. Customer-intimate.
These elements at the heart of the company philosophy have made Barkdale a synonym for advanced measurement and control solutions since 1949. We continuously adapt our innovations to market requirements and offer customized solutions thanks to our global presence. With facilities in North America, Europe and Asia, we are a leading provider that combines close customer relationships with the highest level of technological expertise. Barksdale is part of the global Crane Co. Group. By utilizing synergy effects, growth and customer orientation are always the focus of all business units.

Barksdale®
CONTROL PRODUCTS
CRANE A SUBSIDIARY OF CRANE CO.

Barksdale GmbH – Germany
Dorn-Assenheimer-Straße 27
61203 Reichelsheim, Germany
www.barksdale.de

Barksdale Inc. – LA
3211 Fruitland Avenue
Los Angeles, CA 90058
www.barksdale.com

Barksdale – China
33F Huaihai Plaza, No 1045
Central Huaihai Road Shanghai
200031, P.R.China

Visit Barksdale.de to view our complete product portfolio.

Subject to technical change. Art-No. : Index: --- / 923-3008